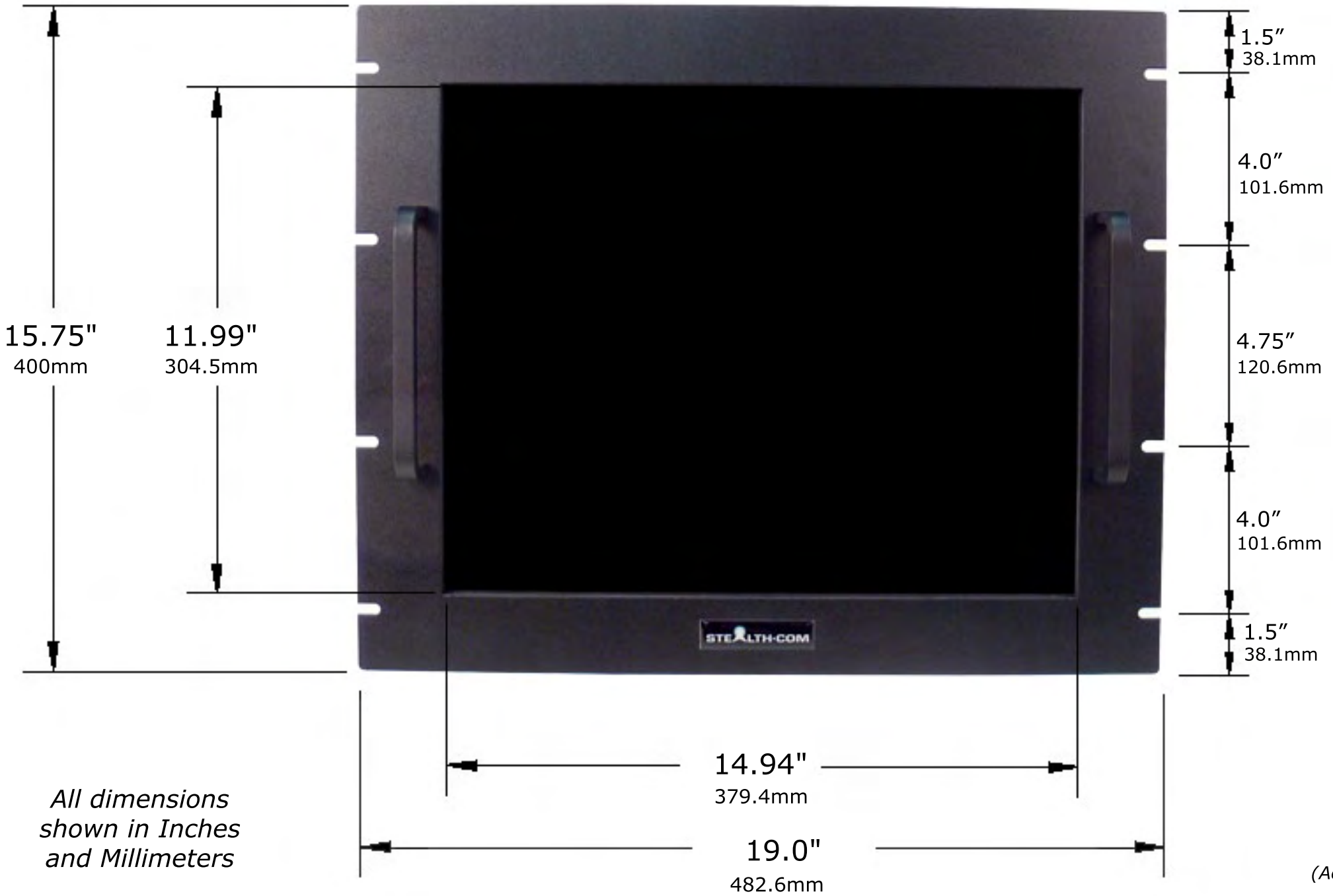

All dimensions shown in Inches and Millimeters

FRONT VIEW

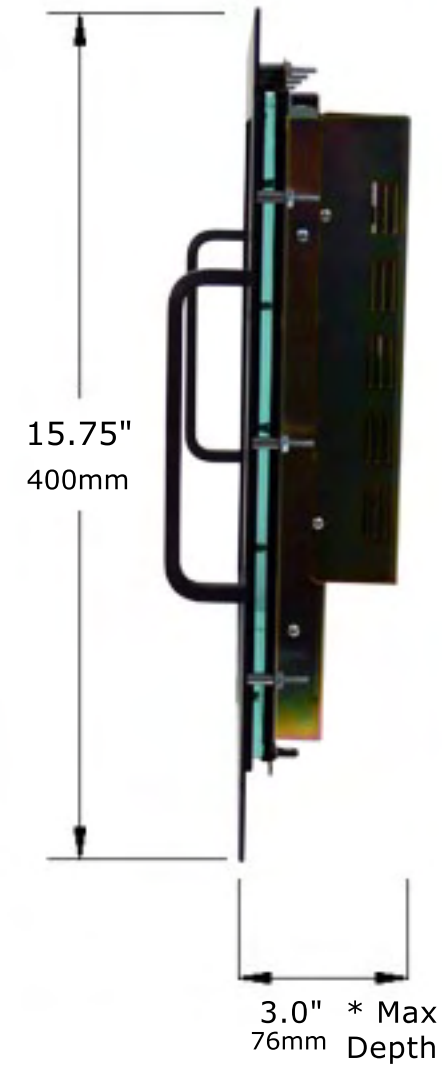

SIDE VIEW

(Actual side view of model may not be exactly as shown)

Model #	*SV-1900P-RM, SV-1900P2-RM & SV-1900P3-RM*
Scale	*Not to Scale*
Date	*April 14,2009*
Drawn by	*Andrew Pakula*
Drawing #	DWG-5041-REV-04-SV1900Px-RM

19" Rack Mount LCD Monitor

www.stealth.com
1-888-STEALTH
STEALTH·COM